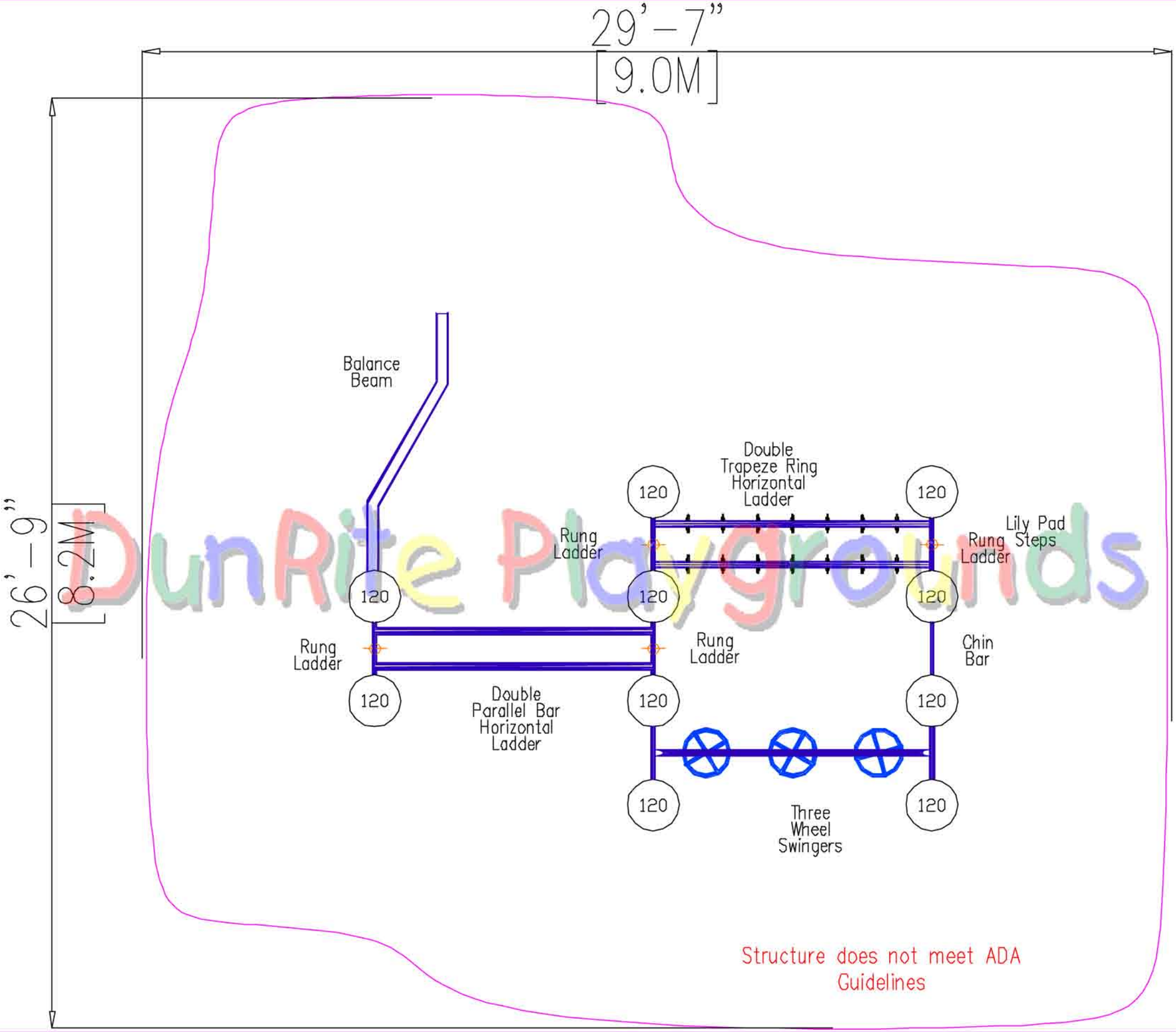

DunRite Playgrounds

PLAYLAND

Notes:

1. This play structure design will meet ADA Accessibility Guidelines for Buildings and Facilities, effective November 17, 2000 as published by the Architectural and Transportation Barriers Compliance Board with the addition of NA, ground level play components of NA different types of play and when installed over accessible surfacing.

2. This site plan should be checked against the actual site area prior to the purchase or installation of equipment.

3. The unit of measure located in the center of the platform indicates the height above the protective surfacing level. The protective surfacing for this design must accommodate a fall height of at least 7 ft.

4. The structure size for this unit is 15' X 18', requiring protective surfacing for an overall use zone of 27' X 30'. The approximate surface area is 700 sq. ft., as required by ASTM F 1487-01 guidelines.

5. The structure is designed to accommodate 20 children from 5 to 12 years of age.

6. Supervise Children as they play.

7. To Ensure that accurate measurements are obtained from this site plan, print copies on 11 x 17 paper at full scale.

8. The customers responsibility is to check local soil conditions and drainage within the site. The site must also be surveyed for underground utilities prior to excavation.

9. Completely read your installation manual prior to beginning construction.

10. This design configuration is the property of this firm and Playland Inc. and may not be reproduced or used in any manner without the expressed written consent of this firm and Playland

11. Perimeter Requires 28 Land Scape Timbers 4' Long.

Structure #: PS3-90669

Scale: None